Neo Mini Solid Surface

Available finishes
Solid surface white. BK

BK In Australia, this product is available exclusively through Reece showrooms.

Assembly
Neo mini basin assembly includes:
- Basin with overflow
- ø32 mm chrome pop up waste
- Rubber seals
- Chrome locknut

Cleaning
Solid surface - Clean with a mild detergent and a soft cloth.
For more stubborn marks a very mild abrasive cleaner can be used with a soft cloth over the entire surface in wide circular motions.
Finish by cleaning off detergents with a soft wet cloth and towel dry.

Additional information and recommended fittings
Neo mini basin can be installed with a left or right hand bowl and can be bench mounted or wall mounted. Basin can be ordered with 0 or 1 tap hole.

Important
This is not an installation guide.
Please contact OMVIVO for technical details.
Product specifications are subject to alteration without notice.

©OMVIVO Pty Ltd. 2009.

Assembly

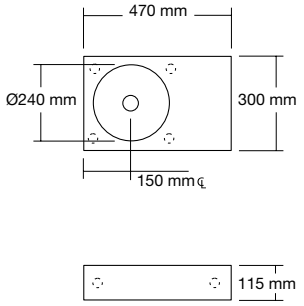

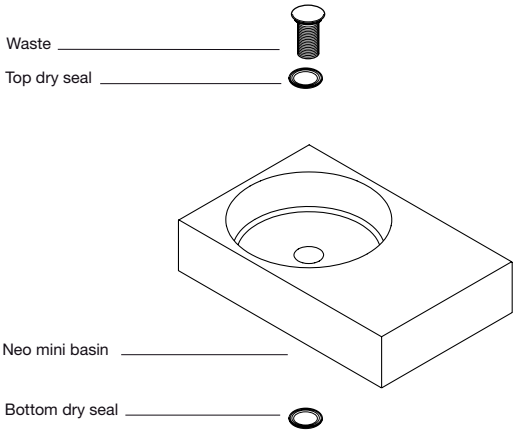

Note: Drawing and assembly illustrate a left hand bowl.
Right hand bowl also available.

design Thomas Coward

OMVIVO

Omvivo Pty Ltd Schiavello Complex
1 Sharps Road Tullamarine
Victoria Australia 3043
T: + 61 3 9339 8130
F: + 61 3 9330 8611
info@omvivo.com
www.omvivo.com

Note: due to varying manufacturing methods, the dimensions illustrated here are nominal and subject to change. Omvivo has detailed, to the best of its ability, the most approximate measurement possible for each product given the method of manufacturing used.